Power Systems Studies

Why to analyse power systems?

GLOBAL MARITIME

blue sea thinking

Why to analyse power systems?

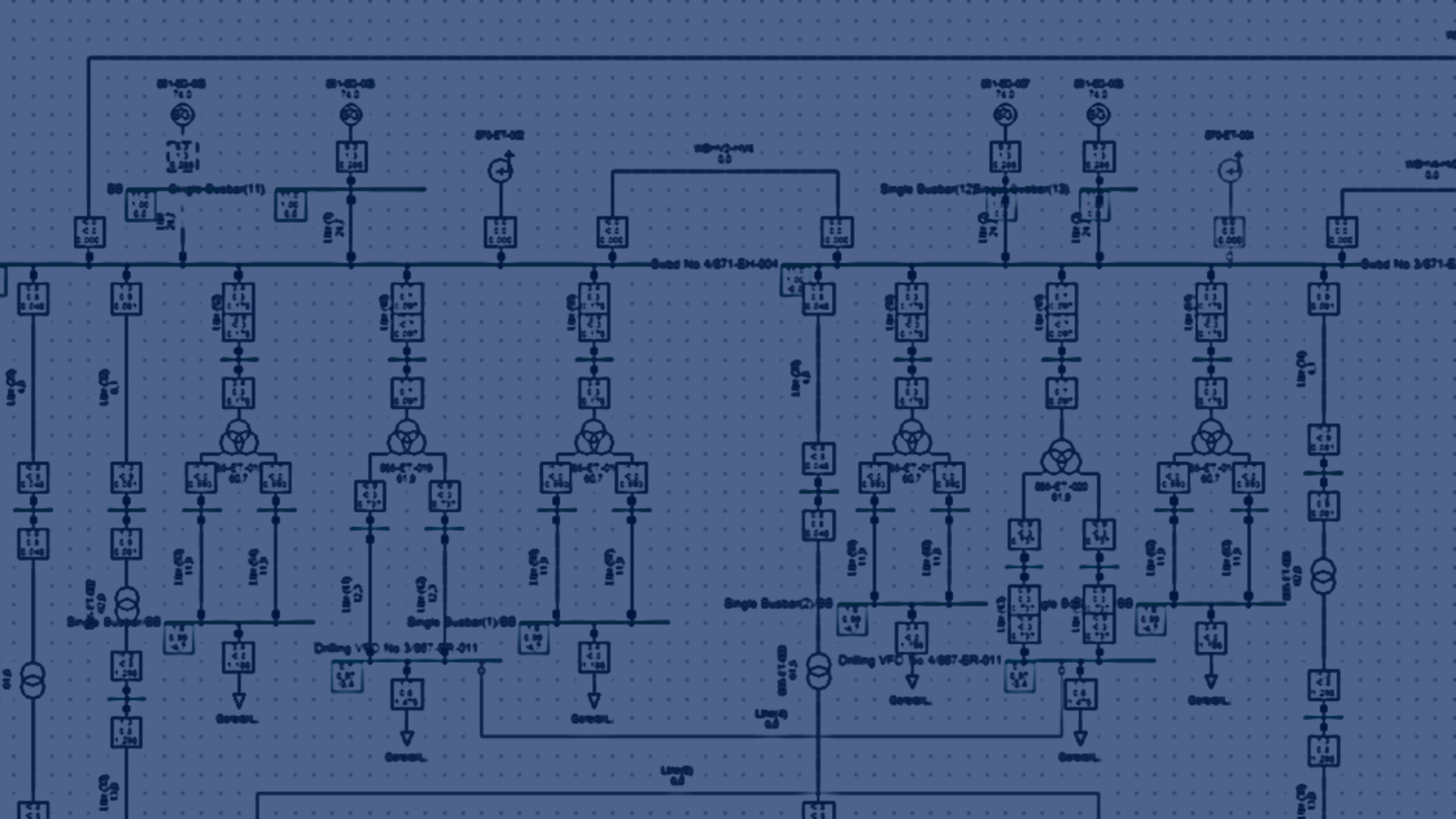

Why to analyse power systems

Traditionally, in the maritime and O&G business, electrical system studies have been conducted only when they were absolutely necessary. This was usually after a problem had already occurred in the system rather than via a proactive pre-engineering design study.

Fortunately, things are changing; as electrical power systems are increasing in power demand, voltage level and overall complexity, power systems simulation and analysis is becoming more important than ever before.

A better understanding of systems prior to their manufacture leads to optimally designed devices. Moreover, for special application as DP closed bus bar operations, Classification Societies and International Associations require to prove the electrical and protection system reliability with dedicated power system studies.

The studies performed by Global Maritime apply to a broad range of maritime and O&G electrical power systems. Most of these systems consume large amounts of electricity and poor power quality can lead to expensive or even catastrophic interruptions.

Global Maritime offers numerous system studies to optimize the design, maximize power quality, improve system reliability and performance, and define failures effects within the power system.
The analysis work is carried out using tried and proven computer programs. Our team of consulting engineers includes experienced analysts who blend equipment expertise with in-depth electrical power systems knowledge.
Power system studies provide the basis for reducing costs, improving efficiency and increasing reliability.

Conceptual Design Study

Conceptual Study stands, in the maritime and O&G industry, at the very early stage of a project, to gain a comprehensive overview of the future power system requirements and to produce an affordable and effective design.

Our Global Maritime team of experts will evaluate the costs of different solution through the total life cycle of the vessel, including CAPEX and OPEX to run the power system. The impact on the environment in terms of energy consumption and CO2 emissions may also be assessed.

In order to do that, load flow, short circuit and stability study techniques will be adopted to evaluate all the relevant aspects of the system as system grounding, protection, transients, harmonics, system operational flexibility and operating costs.

The conceptual study will be the base for the design of the project and will allow electrical designers to develop a system that will meet performance requirements, maximizing benefits of past and future capital investments.

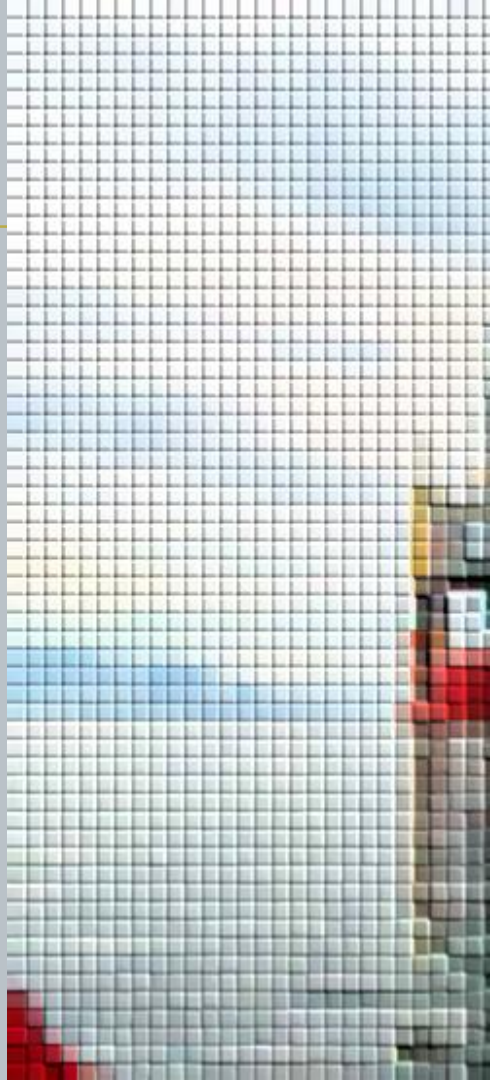

Load Flow Study

A load flow study allows identification of real (kW) and reactive (kVAr) power flows, voltage profiles, power factor and any overloads in the network.

A model of the electrical system is made using a computer load flow program: this allows the engineer to investigate the performance of the network under a variety of different operational conditions, outage conditions or emergency conditions.

These results provide information needed to optimize circuit usage, develop practical voltage profiles, minimize kW and kVAr losses and develop equipment specification guides.

Short Circuit Study

The short circuit study consists in the evaluation of the short circuit current values at every level of the electrical power system.

A short circuit study can help to minimize the consequences of a potential short circuit in the system. When ratings are too low, equipment may fail to interrupt one short circuit and cause another with more widespread effects.

Different network configurations are investigated in order to determinate the maximum and the minimum fault values.

The evaluation of the maximum fault levels is needed to verify the proper sizing of the circuit breakers in terms of short circuit breaking capacity as well as the proper sizing of the rest of electrical equipment in terms of short circuit current withstand capacity.

The evaluation of the minimum fault levels is needed to properly set the relays that act on the protection equipment.

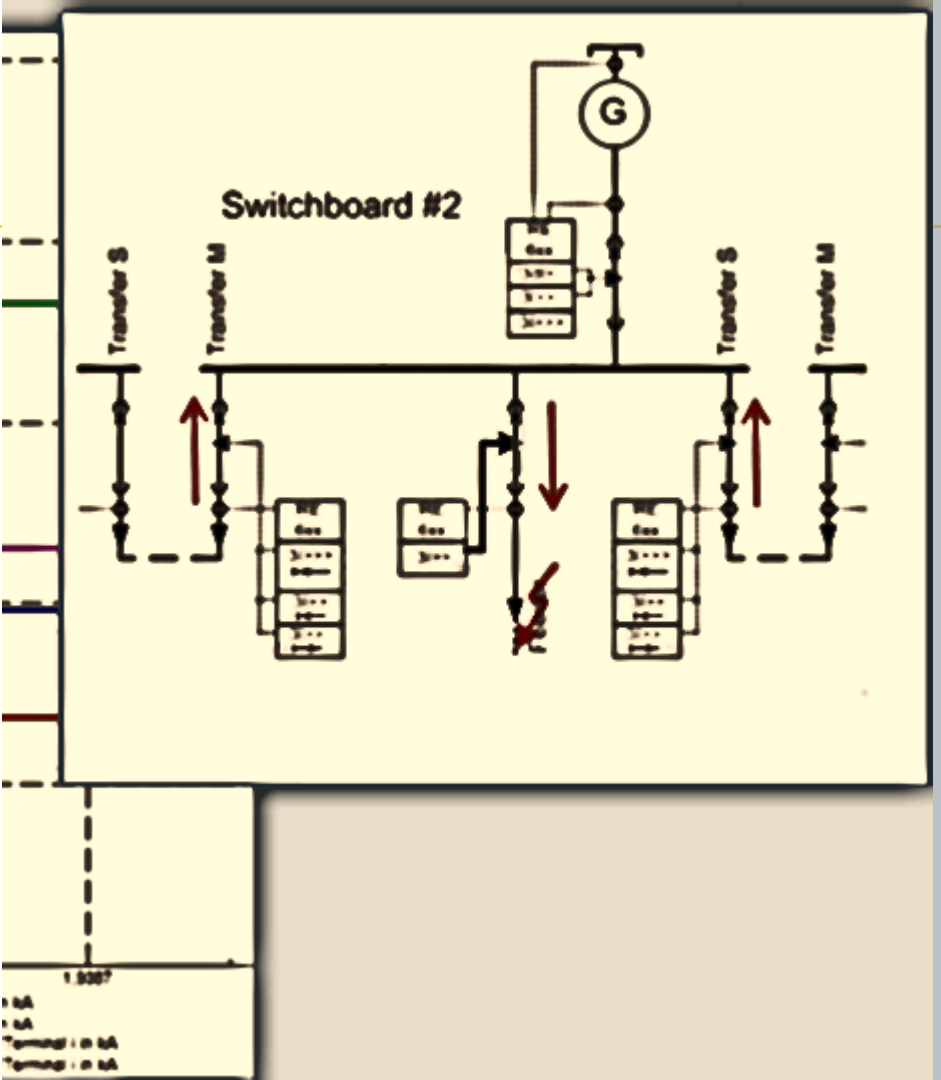

Protective devices coordination study

This study determines the adequacy of protections setting and coordination to safely interrupt and clear fault currents, based on the results of the short circuit study.

A proper protections setting must provide sensitive selective operation of the devices.

In the event of a fault it minimizes interruption of service, limiting damage to faulted apparatus and reducing time required for correcting / isolating the problem and restarting the system.

Transient Stability Study

Transient stability studies are vital to the correct design of closed bus bar or closed ring electrical systems, so that they recently became a mandatory requirements for some Classification Societies, as well recommended by International Associations.

System stability is a concern when two or more generators operate in parallel. Sudden disturbances such as faults, impact loads and switching conditions will cause transient speed changes on the generators, which may prevent the system from remaining in synchronous operation.

For synchronous machines, unstable or out-of-step operation can result in high shaft torques and a depressed system voltage. For induction motors, unstable operation can result in a stall and motor heating.

By modeling the synchronous and induction machines, and the interconnecting elements in the distribution system, evaluations of the system stability can be made and corrective measures taken if stability is a problem.

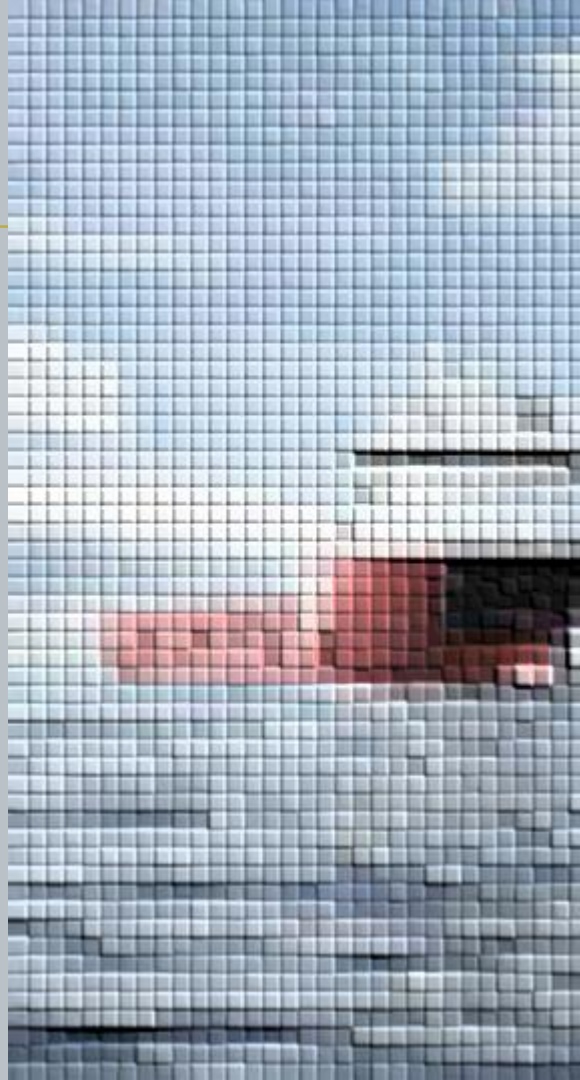

GLOBAL MARITIME

Moreover a transient stability study will assess the fault ride through capability of systems required not to black out, as vessels foreseen DP operations.

With this respect Global Maritime transient stability analysis constitutes the most valuable input to Failure Modes and Effect Analysis (FMEA) for DP systems.

A transient stability study yields useful information for the design of complex power systems, or of load-shedding control systems.

The study may also be used as a remedial tool in reconstructing the events leading to an outage so that corrective measures can be taken to prevent a recurrence of the problem.

Impact load and motor starting study

An impact load study can model the system to determine whether a sudden, heavy consumer may be added to the existing system without causing detrimental operating effects due to voltage fluctuations. Depending on the type of impact load, a variety of solutions are available.

If an impact load study is done prior to ordering a new motor, its design parameters can be modified to minimize system voltage problems. For existing systems, Global Maritime can provide suggestions for reconfiguring the design to allow successful operation with impact loads.

A motor starting study analyzes the motor, the motor load and the connected power system from the moment the motor begins accelerating until it has reached full speed. Using computer models, voltage levels, motor accelerating time, and kW and kVAr flows can be determined during the complete acceleration period.

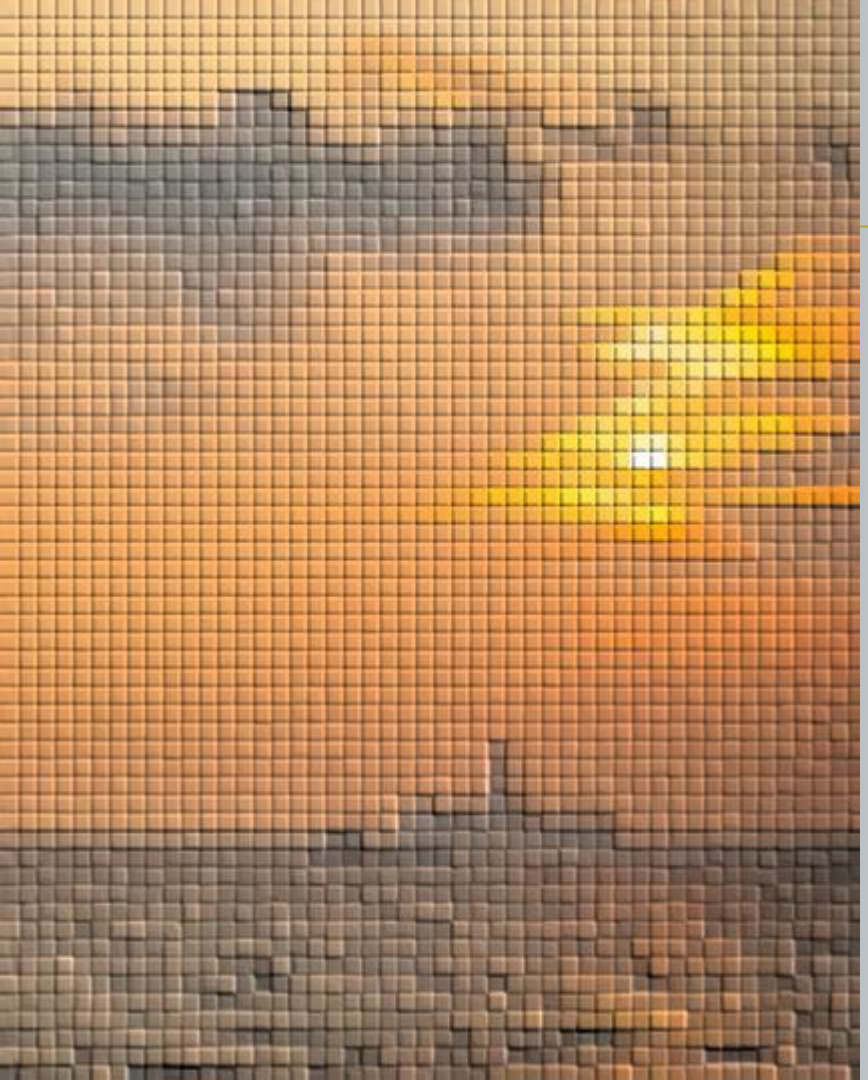

Harmonic Analysis

Harmonic analysis has become more important in marine electrical systems due to the application of static power converters to adjustable speed drives. These non-linear loads can generate high harmonic oscillating currents to exist in the circuit.

The main effects given by the presence of harmonic voltages and currents in a power system are:

- improper intervention of the protection systems,
- reductions in generation efficiency,
- electrical insulation premature aging which reduces life time of equipment,
- potentially threating the secure operation of the whole power system.

Global Maritime can perform harmonic analysis studies and provide the necessary corrective measures.

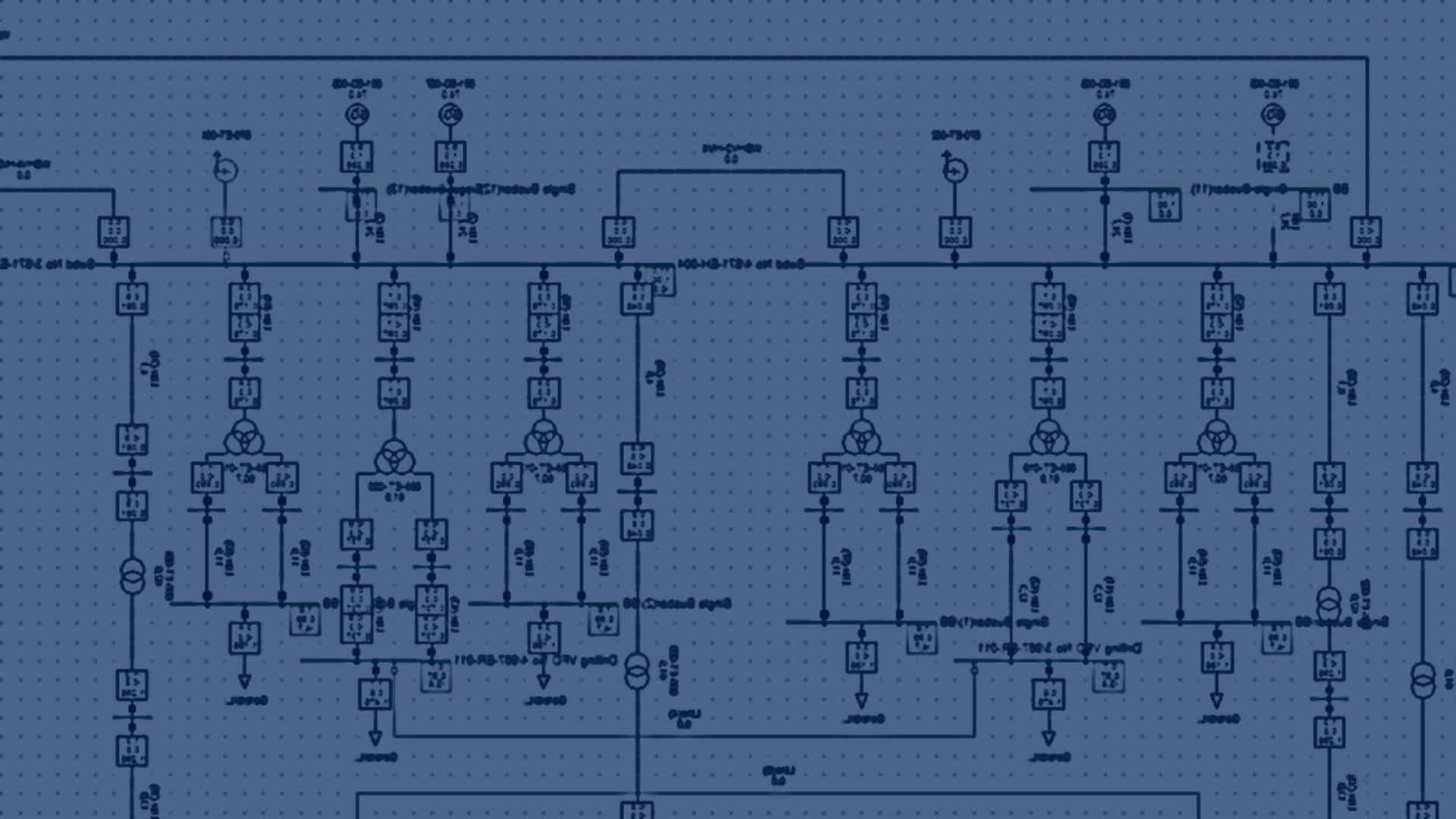

For more information please contact:

Piotr Gussmann
Manager
Global Maritime Poland

Tel: +48 586 888 000
Mob: +48 788 36 36 43
Email:
piotr.gussmann@globalmaritime.com

GLOBAL MARITIME

blue sea thinking